EE511 Protection of Power Systems II

Saeed Lotfifard

Washington State University

slides are from a class note and "Optimal coordination of directional overcurrent relays in distribution systems based on network splitting" Int. Trans. Electr. Energ. Syst. 2015, 25, pp.2310–2324, by Afshin Azari, and Mahdi Akhbari

Coordination of directional overcurrent relays involves setting of relays one by one so that at each stage the relay coordinates with its primary relay. But in a loop as shown in fig 19.1, the last relay to be set is the very first, in which initial setting were assumed.
This makes the relay coordination activity in a mesh system iterative. This should be contrasted with a radial system where the relay coordination is completed in one pass. The iterative nature of relay setting and coordination converges when on revisiting the same relay, if we do not have to change the relay settings and TMS/TDS (TMS stands for Time Multiplier Setting).
As shown in fig 19.1, a typical transmission line is protected by directional relays at both ends. Hence we have to consider two loops, i.e. one loop formed in clockwise direction and the another in anticlockwise direction.

Note: As we discussed in the case of radial systems, we should coordinate relays for the maximum fault current. In general we should check faults at the beginning and the end of the line to check which one causes the maximum fault current. In this example we assume the maximum fault current occurs for a fault at the end of the line

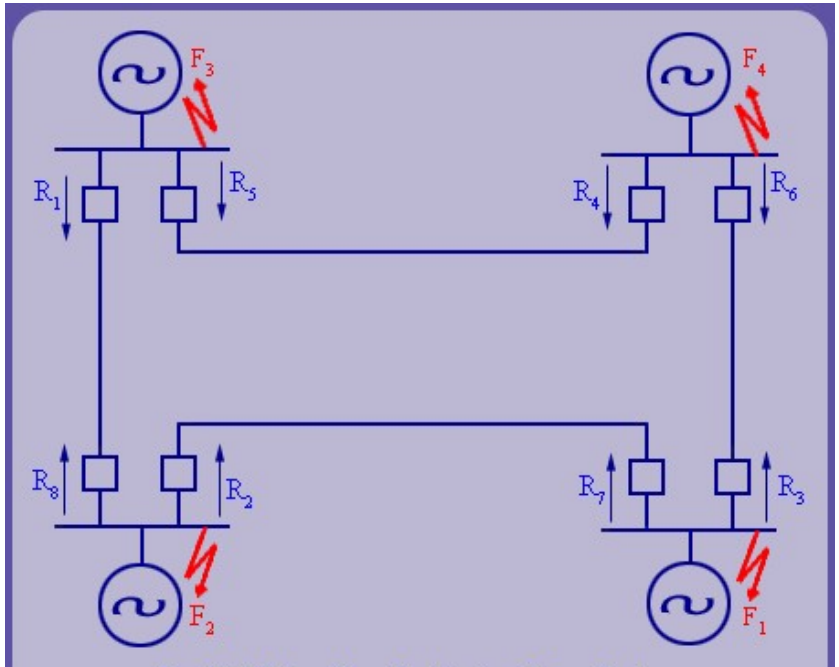

Fig 19.1 Relay Coordination in a Loop System

In this case clockwise loop is given by $R_5 \rightarrow R_6 \rightarrow R_7 \rightarrow R_8 \rightarrow R_5$ and anti clockwise loop is given by $R_1 \rightarrow R_2 \rightarrow R_3 \rightarrow R_4 \rightarrow R_1$ where arrow '$\rightarrow$' should be read as 'backs up'.

Now, let us consider the anticlockwise loop for setting. We can start setting from any one of the four relays, i.e. R_1, R_2, R_3 and R_4. Let us start from R_2, i.e. setting in relay R_2 is assumed appropriately. Typically this implies that some value of TMS within the limits is taken. Limit points should be avoided at initial stage. R_1 will be set to
coordinate with R_2, since R_1 has to back up R_2. Now R_4 has to coordinate with R_1, R_3 with R_4 and R_2 with R_3. Thus we can see that the setting of R_2 has changed from what it was initially to coordinate with R_3. After first iteration, we update the setting of R_2 to the corresponding new setting, to coordinate with R_3, thus closing the loop. If the setting of the R_2 has changed significantly, then we repeat the above process by fine tuning the settings of all the relays in the loop again.

As every iteration improvises the relay settings (TMS), we expect the settings to converge in a few iterations. We have to repeat the same process with the clockwise loop also. Then all the relays will be set and relay coordination activity is complete.

Example

The following example will illustrate this process in detail. In the fig 19.1, the remote bus fault currents seen by each primary and back up relay pairs are tabulated below (Table 1).

Table 1 : Fault Current seen by Primary - Back up Relay Pairs				
	Anti clockwise loop		Clockwise loop	
Remote Bus Fault at	Current seen by primary relay	Current seen by back up relay	Current seen by primary relay	Current seen by back up relay
F_1	R_2 (639A)	R_1 (152A)	R_6 (1365A)	R_5 (272A)
F_2	R_1 (1652A)	R_4 (391A)	R_7(868A)	R_6 (240A)
F_3	R_4 (1097A)	R_3 (140A)	R_8 (1764A)	R_7 (287A)
F_4	R_3 (937A)	R_2 (142A)	R_5 (553A)	R_8 (197A)

For the relays in table 1, if the pick up values are as tabulated in table 2, find out the TMS.

Table 2 : Pick up Values of Relays								
Relay	R_1	R_2	R_3	R_4	R_5	R_6	R_7	R_8
Pick up setting (A)	60	80	60	160	80	160	128	100

We can assume relay setting for any one of the four relays. Let us start setting from relay R_2.

Iteration 1

For relay R_2, assume a TMS of 0.05 (Normal range is 0.025 to 1.2). The reason to initialize TMS to 0.05 and not the minimum value i.e. 0.025 is that further iterations may reduce TMS. If to begin with 0.025 then the problem becomes infeasible.
For fault at F_1 where R_2 acts as primary,

Time of operation of standard inverse relay, $t_{R_2} = \dfrac{TMS_{R_2} \times 0.14}{\left(I/Is\right)^{0.02} - 1}$ (where Is = 80A, I = 639A)

$$= \frac{0.05 \times 0.14}{\left(639/80\right)^{0.02} - 1} = 0.165\text{sec}$$

For fault at F_1, R_1 will back up R_2.

Hence time of operation R_1 = t_{R_2} + CTI (where CTI is the coordination time interval and CTI = 0.3sec.)

= 0.165 + 0.3 = 0.465sec

i.e. $0.465 = \dfrac{TMS_{R_1} \times 0.14}{\left(I/Is\right)^{0.02} - 1}$ (where I = 152A, Is = 60A)

$$= \frac{TMS_{R_1} \times 0.14}{\left(152/60\right)^{0.02} - 1}$$

TMS_{R_1} = 0.0623

For fault at F_2, where R_1 acts as primary,

$$t_{R_1} = \frac{0.0623 \times 0.14}{\left(I/_{Is}\right)^{0.02} - 1} \text{ (where I = 1652A, Is = 60A)}$$

= 0.127sec

Relay R_4 will back up R_1 for fault at F_2. Hence, time of operation of R_4 = t_{R_1} + CTI = 0.127 + 0.3 = 0.427sec

i.e., $0.427 = \frac{TMS_{R_4} \times 0.14}{\left(I/_{Is}\right)^{0.02} - 1}$ (where I = 391A, Is = 160A)

Then, TMS_{R_4} = 0.055

For fault at F_3, where R_4 acts as primary relay, we have

$$t_{R_4} = \frac{TMS_{R_4} \times 0.14}{\left(I/_{Is}\right)^{0.02} - 1} \text{ (where I = 1097A, Is = 160A)}$$

= 0.196sec

Since relay R_3 has to back up R_4, time of operation of relay R_3 = t_{R_4} + CTI = 0.496sec

For a fault at F_3

i.e., $0.496 = \frac{TMS_{R_3} \times 0.14}{\left(I/_{Is}\right)^{0.02} - 1}$ (where I = 140A, Is = 60A)

TMS_{R_3} = 0.0605

Now for fault at F_4, where R_3 acts as primary,

$$t_{R_3} = \frac{TMS_{R_3} \times 0.14}{\left(I/_{Is}\right)^{0.02} - 1} \text{ (where I = 937A, Is = 60A)}$$

= 0.15sec

For fault F_4, R_2 has to back up R_3

i.e., Time of operation of R_2 = t_{R_3} + CTI = 0.45sec

$$0.45 = \frac{TMS_{R_2} \times 0.14}{\left(I/Is\right)^{0.02} - 1}$$ (where I = 142A, Is = 80A)

TMS_{R_2} = 0.037

We had assumed a value of 0.05 for TMS_{R_2}, but now the value has changed to 0.037. Therefore, let us update the TMS of R_2 to 0.037.

Iteration 2

Repeating the same process as above,

For fault at F_1, time of operation $t_{R_2} = \dfrac{0.037 \times 0.14}{\left(639/80\right)^{0.02} - 1}$

= 0.122sec

Time of operation of R_1 = t_{R_2} + CTI

= 0.3 + 0.122 = 0.422sec

i.e., $0.422 = \dfrac{TMS_{R_1} \times 0.14}{\left(152/60\right)^{0.02} - 1}$ or TMS_{R_1} = 0.0565

For fault at F_2, where R_1 acts as primary,

$$t_{R_1} = \frac{0.0565 \times 0.14}{\left(1652/60\right)^{0.02} - 1} = 0.1154$$

R_4 backs up R_1 for fault at F_2

Time of operation of R_4 = t_{R_1} + CTI = 0.1154 + 0.3

= 0.4154

i.e. 0.4154 = $\dfrac{TMS_{R_4} \times 0.14}{\left(391/160\right)^{0.02} - 1}$

TMS_{R_4} = 0.0535

Now, for fault at F_3, where R_4 acts as primary,

$t_{R_4} = \dfrac{0.0535 \times 0.14}{\left(1097/160\right)^{0.02} - 1}$ = 0.191sec

Since, relay R_3 backs up R_4, time of operation of relay R_3 = t_{R_4} + CTI = 0.191 + 0.3 = 0.491

i.e. 0.491 = $\dfrac{TMS_{R_3} \times 0.14}{\left(140/60\right)^{0.02} - 1}$

TMS_{R_3} = 0.0599

For fault at F_4, where R_3 acts as primary,

Time of operation $t_{R_3} = \dfrac{0.0599 \times 0.14}{\left(937/60\right)^{0.02} - 1}$ = 0.1484sec

R_2 backs up R_3; Therefore,

Time of operation of R_2 = t_{R_3} + CTI = 0.3 + 0.1484

= 0.4484sec

i.e. 0.4484 = $\dfrac{TMS_{R_2} \times 0.14}{\left(142/80\right)^{0.02} - 1}$

TMS_{R_2} = 0.0369

Now, let us update the TMS of R_2 to this new value, i.e., 0.0369 and repeat iteration.

Iteration 3

For fault at F_1, $t_{R_2} = \dfrac{0.0369 \times 0.14}{\left(639/80\right)^{0.02} - 1}$

= 0.1217sec

For relay R_1, which has to back up R_2

Time of operation = 0.3 + 0.1217 = 0.4217sec

i.e. $0.4217 = \dfrac{TMS_{R_1} \times 0.14}{\left(152/60\right)^{0.02} - 1}$

TMS_{R_1} = 0.0565

Then for fault at F_2, $t_{R_1} = \dfrac{0.0565 \times 0.14}{\left(1652/60\right)^{0.02} - 1}$ = 0.1154sec

Since R_4 backs up R_1, time of operation of R_4

= 0.1154 + 0.3 = 0.4154sec

i.e. $0.4154 = \dfrac{TMS_{R_4} \times 0.14}{\left(391/160\right)^{0.02} - 1}$

TMS_{R_4} = 0.0535

For fault at F_3, where R_4 acts as primary, we have

$t_{R_4} = \dfrac{0.0535 \times 0.14}{\left(1097/160\right)^{0.02} - 1}$ = 0.191sec

R_3 backs up R_4

Time of operation of R_3 = 0.3 + 0.191 = 0.491sec

i.e. 0.491 = $\dfrac{TMS_{R_3} \times 0.14}{\left(140/60\right)^{0.02} - 1}$

TMS_{R_3} = 0.0599

For fault at F_4, $t_{R_3} = \dfrac{0.0599 \times 0.14}{\left(937/60\right)^{0.02} - 1}$

= 0.1484sec

Now R_2 backs up R_3

i.e. time of operation of R_2 = 0.3 + 0.1484 = 0.4484 = $\dfrac{TMS_{R_2} \times 0.14}{\left(142/80\right)^{0.02} - 1}$

TMS_{R_2} = 0.0369 which is same as the result of iteration 2.

Therefore no more iteration is required. Hence, setting and coordination of all the four anticlockwise relays are complete.

For fault at F_1, $t_{R_2} = \dfrac{0.0369 \times 0.14}{\left(639/80\right)^{0.02} - 1}$

= 0.1217sec

For relay R_1, which has to back up R_2

Time of operation = 0.3 + 0.1217 = 0.4217sec

i.e. $0.4217 = \dfrac{TMS_{R_1} \times 0.14}{\left(152/60\right)^{0.02} - 1}$

TMS_{R_1} = 0.0565

Then for fault at F_2, $t_{R_1} = \dfrac{0.0565 \times 0.14}{\left(1652/60\right)^{0.02} - 1}$ = 0.1154sec

Since R_4 backs up R_1, time of operation of R_4

= 0.1154 + 0.3 = 0.4154sec

i.e. $0.4154 = \dfrac{TMS_{R_4} \times 0.14}{\left(391/160\right)^{0.02} - 1}$

TMS_{R_4} = 0.0535

For fault at F_3, where R_4 acts as primary, we have

$t_{R_4} = \dfrac{0.0535 \times 0.14}{\left(1097/160\right)^{0.02} - 1}$ = 0.191sec

R_3 backs up R_4

Time of operation of R_3 = 0.3 + 0.191 = 0.491sec

i.e. 0.491 = $\dfrac{TMS_{R_3} \times 0.14}{\left(140/60\right)^{0.02} - 1}$

TMS_{R_3} = 0.0599

For fault at F_4, $t_{R_3} = \dfrac{0.0599 \times 0.14}{\left(937/60\right)^{0.02} - 1}$

= 0.1484sec

Now R_2 backs up R_3

i.e. time of operation of R_2 = 0.3 + 0.1484 = 0.4484 = $\dfrac{TMS_{R_2} \times 0.14}{\left(142/80\right)^{0.02} - 1}$

TMS_{R_2} = 0.0369 which is same as the result of iteration 2.

Therefore no more iteration is required. Hence, setting and coordination of all the four anticlockwise relays are complete.

Setting and Coordination of Clockwise Relays

Iteration 1

Now let us start setting all the clockwise relays. Let us start from relay R_5 for fault at F_4.

Assume a TMS of 0.05 for relay R_5. Then, time of operation of relay R_5, $t_{R_5} = \dfrac{0.05 \times 0.14}{\left(553/80\right)^{0.02} - 1} = 0.1775$

i.e. Time of operation of back up relay R_8 = t_{R_5} + CTI

= 0.1775 + 0.3
= 0.4775sec

Now, $0.4775 = \dfrac{TMS_{R_8} \times 0.14}{\left(197/100\right)^{0.02} - 1}$

= 0.04656

TMS_{R_8}

For a fault at F_3, where R_8 acts as primary,

$$t_{R_8} = \frac{0.0465 \times 0.14}{\left(1764/100\right)^{0.02} - 1} = 0.11\text{sec}$$

Now relay R_7 will back up R_8. Then time of operation of R_7 = 0.11 + 0.3 = 0.41sec

$$\text{i.e., } 0.41 = \frac{TMS_{R_7} \times 0.14}{\left(287/128\right)^{0.02} - 1}$$

TMS_{R_7} = 0.0477

R_7 acts as primary relay for fault at F_2.

$$t_{R_7} = \frac{0.0477 \times 0.14}{\left(868/128\right)^{0.02} - 1} = 0.1711\text{sec}$$

R_6 backs up R_7,
i.e. Time of operation for R_6
= 0.1711 + 0.3 = 0.4711

i.e. 0.4711 = $\dfrac{TMS_{R_6} \times 0.14}{\left(240/160\right)^{0.02} - 1}$

TMS_{R_6} = 0.0274

For fault at F_1, R_6 acts as primary,

i.e., $t_{R_6} = \dfrac{0.0274 \times 0.14}{\left(1365/160\right)^{0.02} - 1}$ = 0.0875sec

R_5 backs up R_6
i.e. Time of operation of R_5 = 0.0875 + 0.3 = 0.3875

i.e., 0.3875 = $\dfrac{TMS_{R_5} \times 0.14}{\left(272/80\right)^{0.02} - 1}$

TMS_{R_5} = 0.0686

i.e. after 1st iteration TMS of R_5 has been changed from 0.05 to 0.0686. Let us update TMS of R_5 to 0.0686 and begin iteration 2.

Iteration 2

TMS_{R_5} = 0.0686

For fault F_4, = 0.2436

$$t_{R_5} = \frac{0.0686 \times 0.14}{\left(553/80\right)^{0.02} - 1}$$

For fault at F_4, R_8 backs up R_5

i.e. Time of operation of R_5 = t_{R_5} + CTI = 0.2436 + 0.3

= 0.5436sec

i.e. 0.5436 = $\dfrac{TMS_{R_8} \times 0.14}{\left(197/100\right)^{0.02} - 1}$

TMS_{R_8} = 0.053

For fault F_3, where R_8 acts as primary,

$t_{R_8} = \dfrac{0.053 \times 0.14}{\left(1764/100\right)^{0.02} - 1}$ = 0.1256sec

Relay R_7 backs up R_8

Time of operation of R7 = 0.1256 + 0.3 = 0.4256sec

i.e. 0.4256 = $\dfrac{TMS_{R_7} \times 0.14}{\left(287/128\right)^{0.02} - 1}$

TMS_{R_7} = 0.0495

For fault at F_2, R_7 acts as primary,

i.e. $t_{R_7} = \dfrac{0.0477 \times 0.14}{\left(868/128\right)^{0.02} - 1}$ = 0.1776sec

R_6 backs up R_7,

i.e. Time of operation for R_6 = 0.1776 + 0.3 = 0.4776sec

i.e. $0.4776 = \dfrac{TMS_{R_6} \times 0.14}{\left(240/160\right)^{0.02} - 1}$

TMS_{R_6} = 0.0278

For fault at F_1, R_6 acts as primary,

i.e. $t_{R_6} = \dfrac{0.0278 \times 0.14}{\left(1365/160\right)^{0.02} - 1}$ = 0.0888sec

R_5 backs up R_6,

i.e. Time of operation of R_5 = 0.0888 + 0.3

= 0.3888sec

i.e. $0.3888 = \dfrac{TMS_{R_5} \times 0.14}{\left(272/80\right)^{0.02} - 1}$

TMS_{R_5} = 0.0688

Now let us set TMS of R_5 to 0.0688 and repeat iteration.

Iteration 3

TMS_{R_5} = 0.0688

For fault at F_4 $t_{R_5} = \dfrac{0.0688 \times 0.14}{\left(553/80\right)^{0.02} - 1}$ = 0.2443

R_8 backs up R_5,

i.e. Time of operation of R_8 = t_{R_5} + CTI = 0.2443 + 0.3

= 0.5443sec

$$0.5443 = \frac{TMS_{R_8} \times 0.14}{\left(197/100\right)^{0.02} - 1}$$

i.e. TMS_{R_8} = 0.0531

For fault at F_3, R_8 acts as primary,

Then $t_{R_8} = \dfrac{0.0531 \times 0.14}{\left(1764/100\right)^{0.02} - 1}$ = 0.1258sec

Relay R_7 backs up R_8

i.e. Time of operation of R_7 = 0.3 + 0.1258 = 0.4258sec

$$0.4258 = \frac{TMS_{R_7} \times 0.14}{\left(287/128\right)^{0.02} - 1}$$

TMS_{R_7} = 0.0495

For fault at F_2, R_7 acts as primary,

i.e. $t_{R_7} = \dfrac{0.0495 \times 0.14}{\left(868/128\right)^{0.02} - 1}$ = 0.1776sec

R_6 backs up R_7, Time of operation of R_6,

= 0.3 + 0.1776 = 0.4776sec

i.e. $0.4776 = \dfrac{TMS_{R_6} \times 0.14}{\left(240/160\right)^{0.02} - 1}$

TMS_{R_6} = 0.0278

For fault at F_1, R_6 acts as primary,

$t_{R_6} = \dfrac{0.0278 \times 0.14}{\left(1365/160\right)^{0.02} - 1}$ = 0.0888sec

Since R_5 backs up R_6 for fault at F_1, time of operation of R_5 = 0.3 + 0.0888sec = 0.3888sec

i.e., $0.3888 = \dfrac{TMS_{R_5} \times 0.14}{\left(272/80\right)^{0.02} - 1}$

TMS_{R_5} = 0.0688.

Since, the result of iterations 2 and 3 are the same, the iteration is complete. Thus, all the clockwise relays are set. The settings are tabulated in table 3.

Setting and Coordination of Clockwise Relays

Table 3 TMS Setting for Relay			
Relay	1st Iteration	2nd Iteration	3rd Iteration
R_1	0.623	0.0565	0.0565
R_2	0.05	0.0369	0.0369
R_3	0.0605	0.0599	0.0599
R_4	0.055	0.0535	0.0535
R_5	0.05	0.0686	0.0688
R_6	0.0274	0.0278	0.0278
R_7	0.0477	0.0495	0.0495
R_8	0.04656	0.053	0.0531

complexity of coordination problem increases in multiple loop system which share some relays. Hence we have to find one common acceptable setting for relays which share multiple loops so that their coordination in individual loops is achievable. The number of such relays should be kept to minimum, so that we make minimum assumptions on relay setting in coordination of loops. Such relays are called Minimum Break Point Relays. For example, it can be verified that R_6, R_{14} and R_9 are such relays in the fig 20.1. By opening these relays, we are able to break any clockwise or anti clockwise relay loops and it should be checked that no other relay set exists which achieves the above criteria with lesser number of relays. If you open R_1, R_{13}, R_4 and R_{10} all loops are broken. But we now require four relays. Therefore, the first choice is more acceptable than the second because we have to assume lesser number of TMS to start the coordination process. There can be multiple choices to minimum break point relays. For example an alternative choice is R_{12}, R_7 and R_3.

Computation of minimum break point set of relays is a involved problem which requires combinatorial optimization techniques.

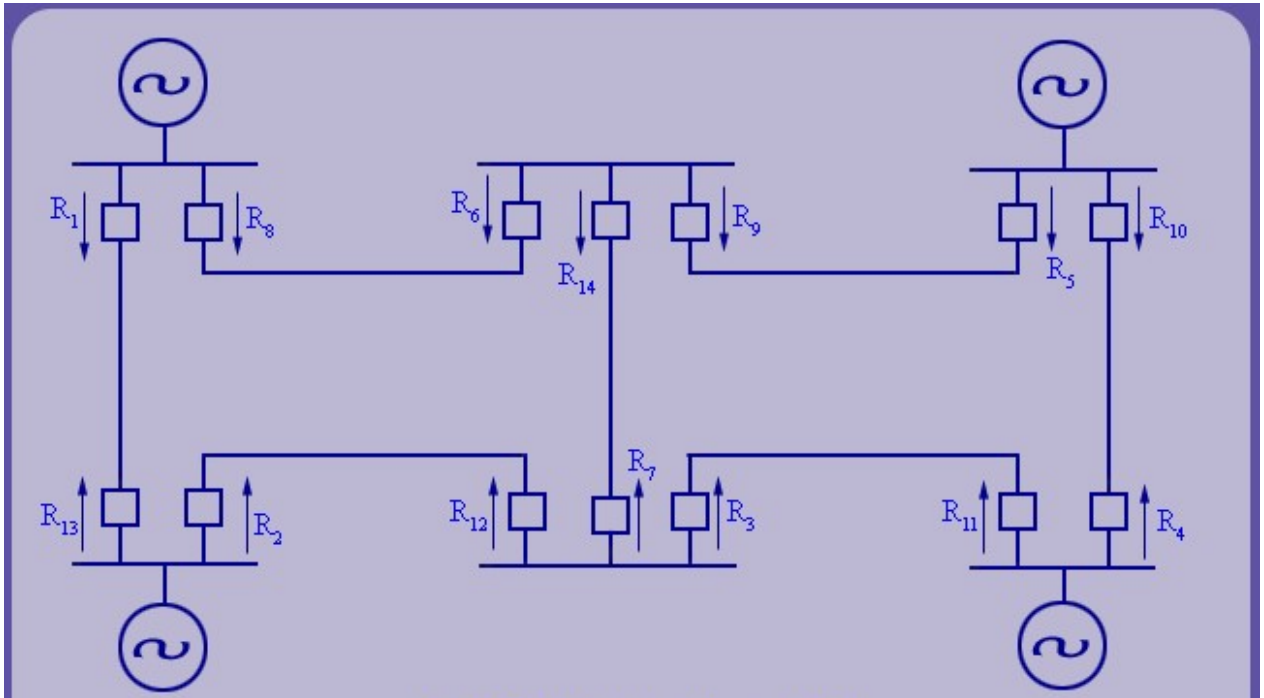

Fig 20.1 An Illustrative Example System

Now let us analyze the system in more detail. There are 3 simple loops in the fig 20.1. So the three clockwise coordination problems are given by,

1. $R_8 \rightarrow R_{14} \rightarrow R_{12} \rightarrow R_{13}$

2. $R_9 \rightarrow R_{10} \rightarrow R_{11} \rightarrow R_7$

3. $R_8 \rightarrow R_9 \rightarrow R_{10} \rightarrow R_{11} \rightarrow R_{12} \rightarrow R_{13}$

Similarly, 3 anti clockwise loop coordination problems are given by,

4. $R_1 \rightarrow R_2 \rightarrow R_7 \rightarrow R_6$

5. $R_{14} \rightarrow R_3 \rightarrow R_4 \rightarrow R_5$

6. $R_1 \rightarrow R_2 \rightarrow R_3 \rightarrow R_4 \rightarrow R_5 \rightarrow R_6$

Now these loops are not exclusive and they share relays. For example, loop 1 and loop 3 share R_8, R_{12} and R_{13}. Therefore, it implies that individual loops cannot be coordinated independently. So the crux of the problem is to find acceptable setting at relays which are shared by multiple loops. Now, take the example of R_6, R_{14} and R_9. These relays feature in all loops and by opening them we can open all clockwise and anti clockwise loops. Similar statement can be made for R_3, R_7 and R_{12}. This set also appears in all loops.

Another such set is R_1, R_{13}, R_4 and R_{10}. Now it is better to begin by assuming setting in R_6, R_{14} and R_9 or R_{12}, R_7 and R_3, because they involves lesser number of relays than R_1, R_{13}, R_4 and R_{10}. Thus amount of assumptions are reduced which should reduce the number of iterations in relay coordination. Such a set of minimum number of relays which when opened break all loops in the system are called Minimum Break Point Relay set. There are multiple choices, but each of such sets has same (minimum) number of relays.

Coordination of directional relays using optimization methods

The objective function is defined as the summation of the primary operating times of relays for both near-end and far-end faults

$$\min Z = \sum_{i=1}^{n} \alpha_i \left(t_i^N + t_i^F \right)$$

t_i^N	relay i operation time for near-end fault
t_i^F	relay i operation time for far-end fault
α_i	weight factor for relay i (considered to be 1 for all relays)
min Z	objective function

Overcurrent relay tripping time can be calculated based upon the fundamental equation (1). Where t is the time taken for relay operation, m is the TMS multiplier constant, I_F is the fault current observed, I_P is the pickup current of the relay, and k is the plug setting multiplier index.

$$t = \frac{m \times TMS}{\left(\frac{I_F}{I_P}\right)^k - 1} \qquad (1)$$

Note: Time Multiplier *Setting* (*TMS*) is the same as *Time Dial Setting*(*TDS*)

The relay settings shall be based on the standard characteristics that have been identified in IEC 60255 as shown below in Table 2

Table 2. Relay Characteristics from IEC 60255

Relay Characteristic	TMS Multiplier Constant, m	Plug Setting Multiplier Index, k
Standard Inverse (SI)	0.14	0.02
Very Inverse (VI)	13.5	1
Extremely Inverse (EI)	80	2

The fault current is sensed by both primary and backup relays, but the backup relays should only operate when the primary relays fail to send the signal to the circuit breaker. The minimum operating time of backup relays are determined by the primary relays and circuit breaker operating times and overshoot time. This constraint should be regarded for all primary and backup relays and in all fault currents. Figure 2 illustrates the problem caused by near-end fault approach. It shows that consideration of only near-end faults in selectivity constraints may lead to inconsistency between primary and backup relay in lower fault currents, so like the objective function, the constraints also are considered on the basis of both near-end and far-end faults as shown in the succeeding texts

Figure 1. Near-end and far-end faults for relay i.

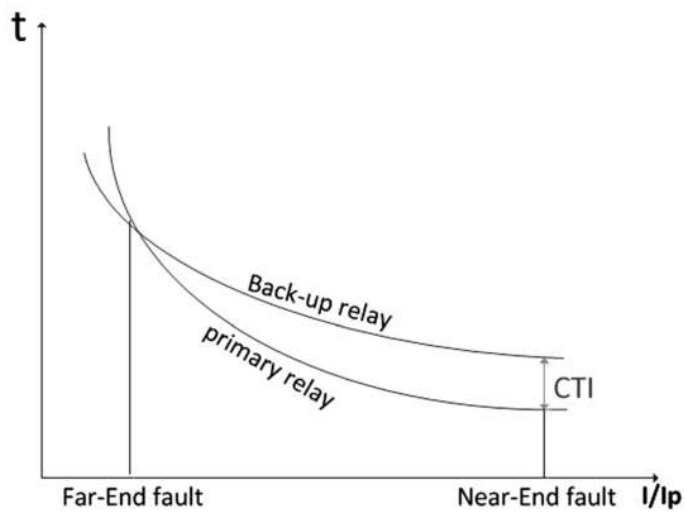

Figure 2. Primary and backup relays' time curves.

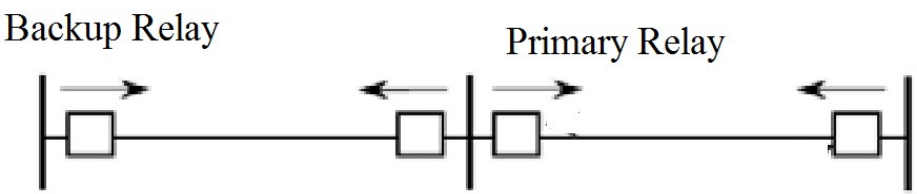

$$t_j^N - t_i^N > \text{CTI} \quad (2)$$

$$t_j^F - t_i^F > \text{CTI} \quad (3)$$

where

t_j^N	backup relay j operation time for near-end fault
t_i^N	primary relay i operation time for near-end fault
t_j^F	backup relay j operation time for far-end fault
t_i^F	primary relay i operation time for far-end fault
CTI	coordination time interval

The coordination time interval is assumed to be 0.2 s for all relays. The TMS (*Time* Multiplier *Setting* (*TMS*) or *Time Dial Setting*. (*TDS*)) of each relay directly affects the operating time of the relay. The bounds on TMS of relays can be stated as follows:

$$TMS_{i,\,min} < TMS_i < TMS_{i,\,max} \tag{4}$$

where

$TMS_{i,min}$ minimum allowed TMS for relay R_i
$TMS_{i,max}$ maximum allowed TMS for relay R_i
TMS_i TMS of relay R_i

The bounds on pickup setting of the relays can be stated as follows:

$$Ip_{i,\,min} < Ip_i < Ip_{i,\,max} \tag{5}$$

where

$Ip_{i,min}$ minimum value of relay R_i pickup
$Ip_{i,max}$ maximum value of relay R_i pickup
Ip_i relay R_i pickup current

The minimum limit of TMS indicates how fast the relay can operate in order to let the transient condition pass and prevents wrong trips, and the maximum limit indicates the maximum allowable fault clearing time. The TMS bounds are, respectively, considered to be 0.1 and 1.3. The minimum PS of the relay is the maximum value between the minimum available tap setting and a four-third of the maximum load current passes through it. The maximum Ip considered to be two third of the minimum fault current seen by the relay as backup. These considerations assure that the relay does not trip in overload condition and also senses the far-end faults of the lines under protection as backup relay. The upper bounds are rounded off to the lower available tap settings, and the lower bounds are rounded off to the upper available tap settings.